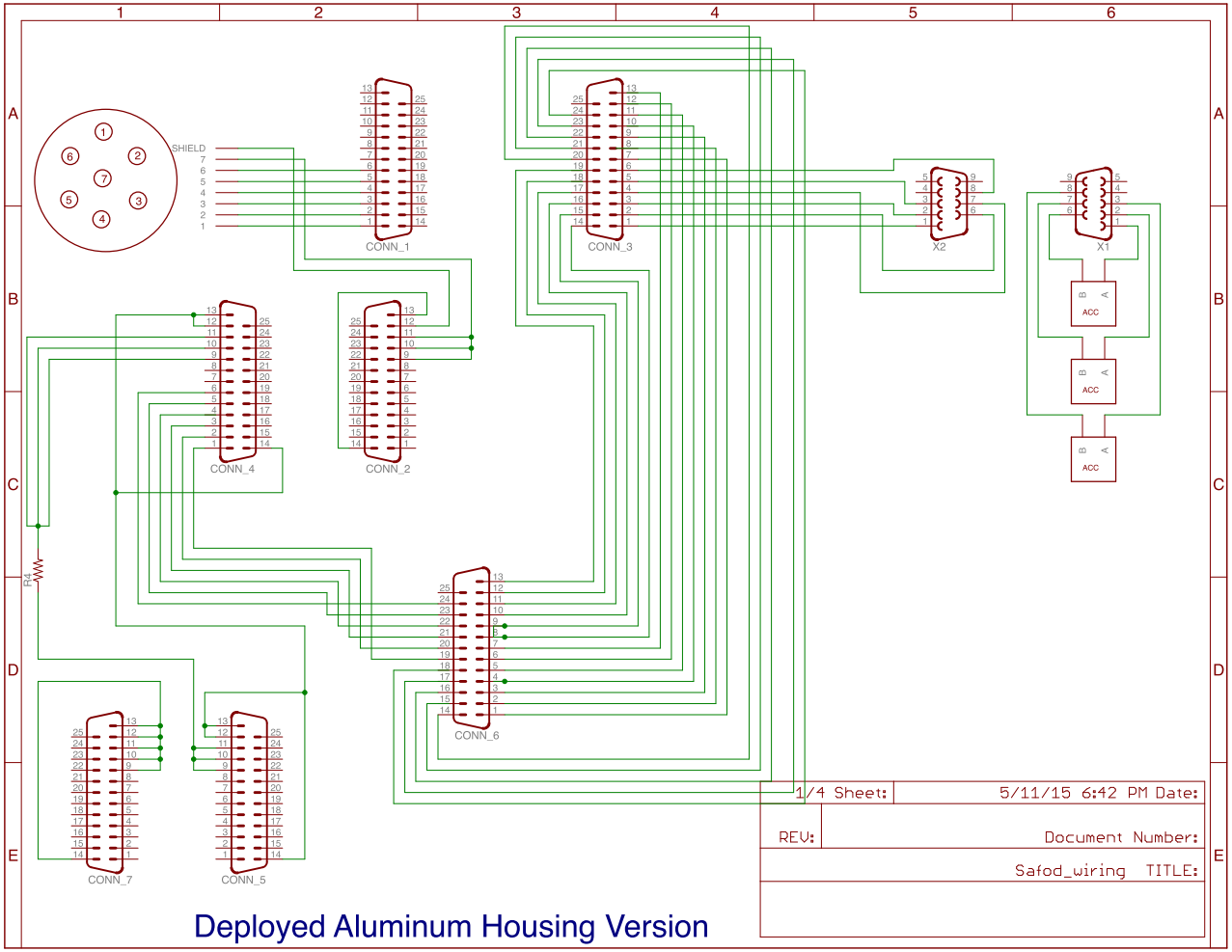
SHIELD
CONN_1
CONN_2
CONN_3
CONN_4
CONN_5
CONN_6
CONN_7
X1
X2
ACC
ACC
ACC
R4
1/4 Sheet:
5/11/15 6:42 PM Date:
REV:
Document Number:
Safod_wiring TITLE:
Deployed Aluminum Housing Version

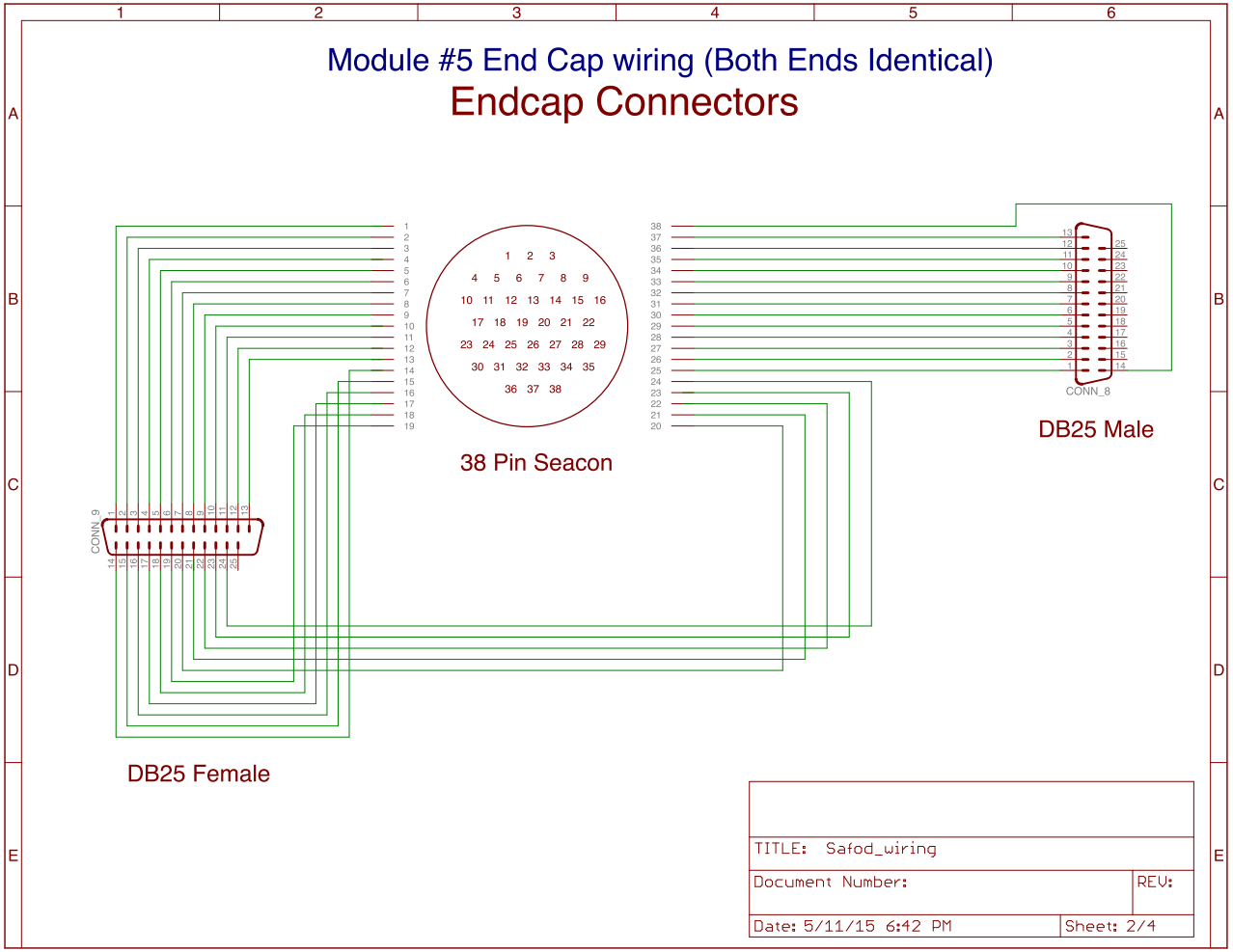
Module #5 End Cap wiring (Both Ends Identical)
Endcap Connectors
38 Pin Seacon
DB25 Male
CONN_8
DB25 Female
CONN_9
TITLE: Safod_wiring
Document Number:
REV:
Date: 5/11/15 6:42 PM
Sheet: 2/4

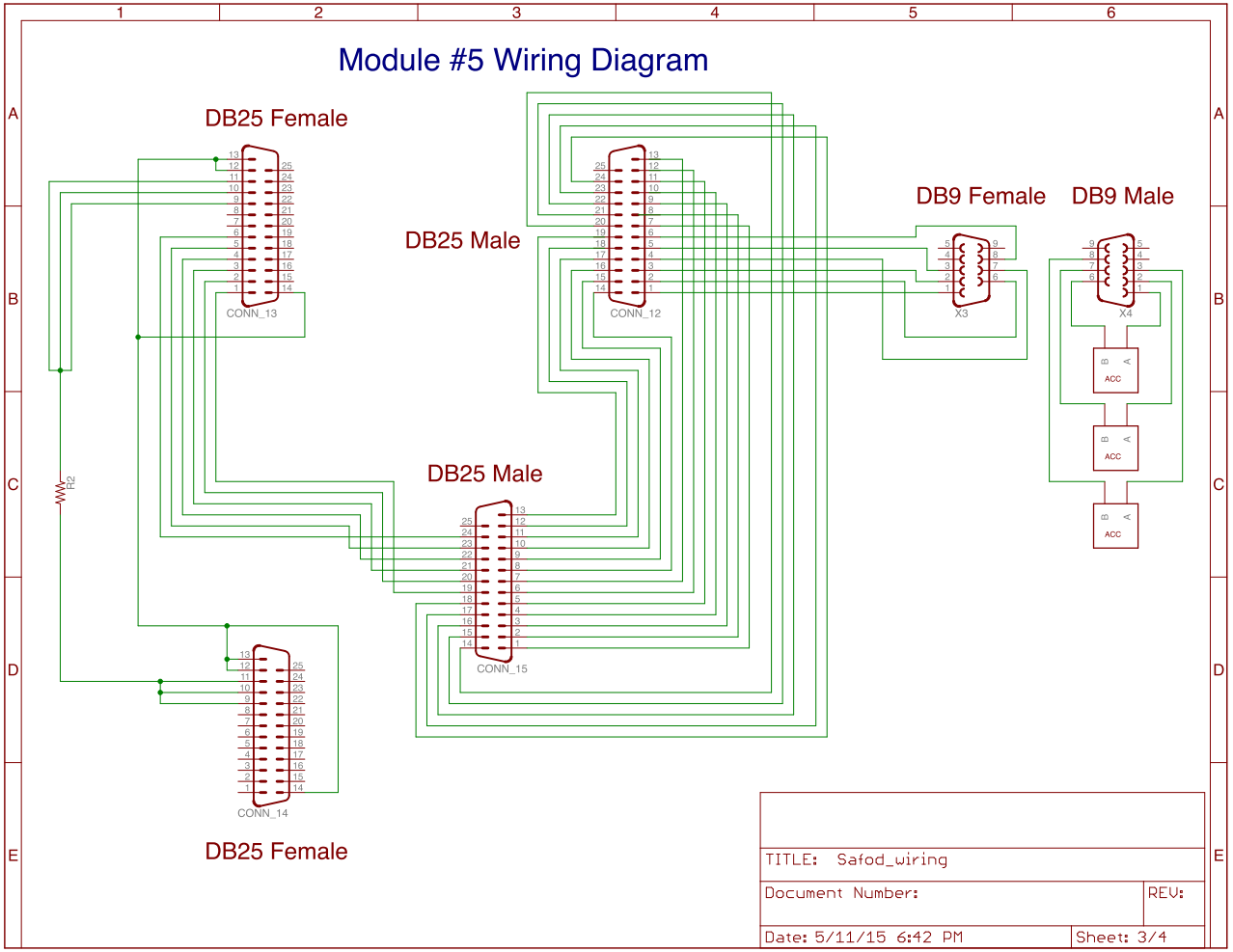
Module #5 Wiring Diagram
DB25 Female
DB25 Male
DB9 Female
DB9 Male
DB25 Male
DB25 Female
CONN_13
CONN_12
X3
X4
CONN_15
CONN_14
R2
ACC
ACC
ACC
TITLE: Safod_wiring
Document Number:
REV:
Date: 5/11/15 6:42 PM
Sheet: 3/4

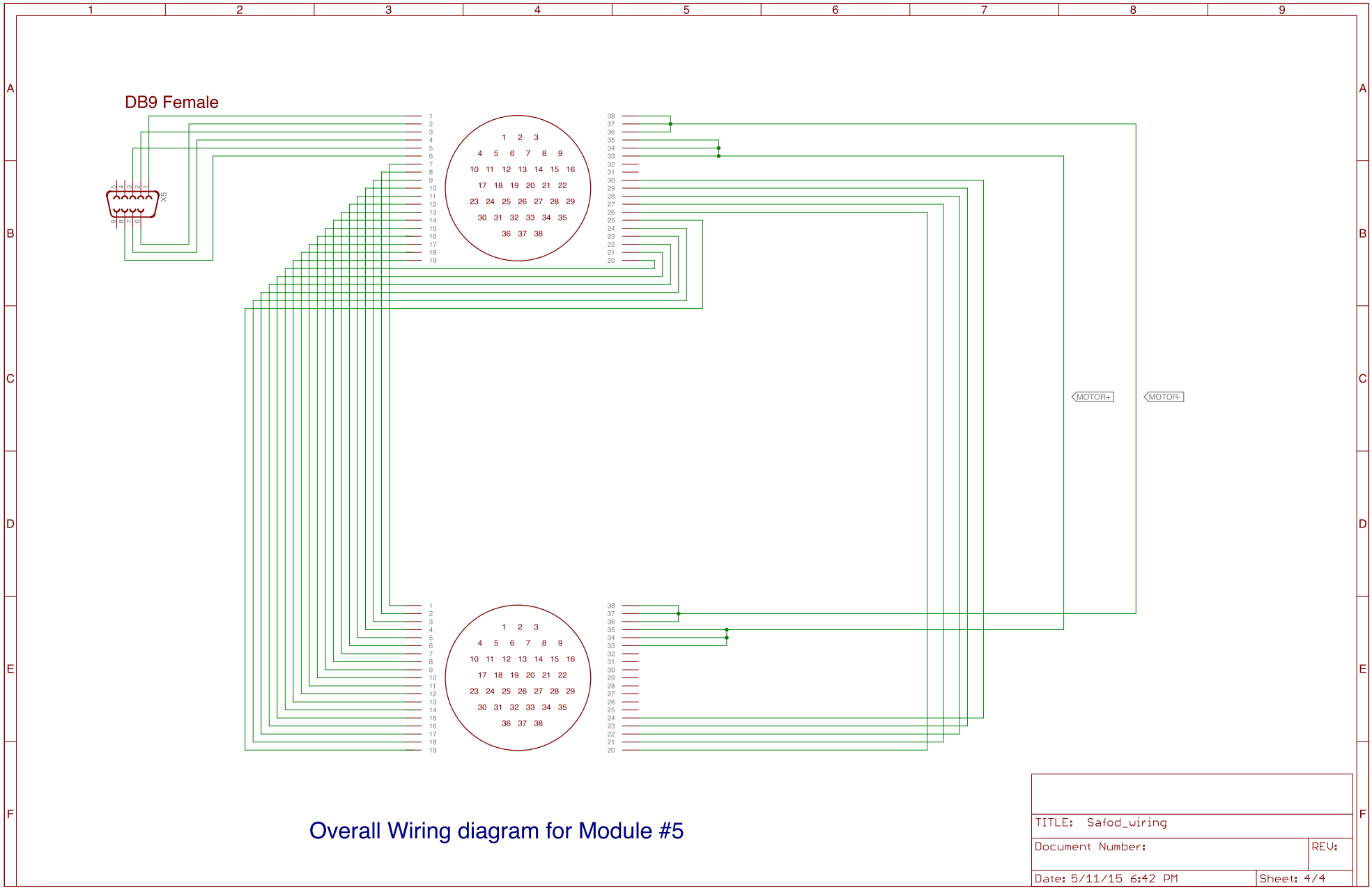

Overall Wiring diagram for Module #5