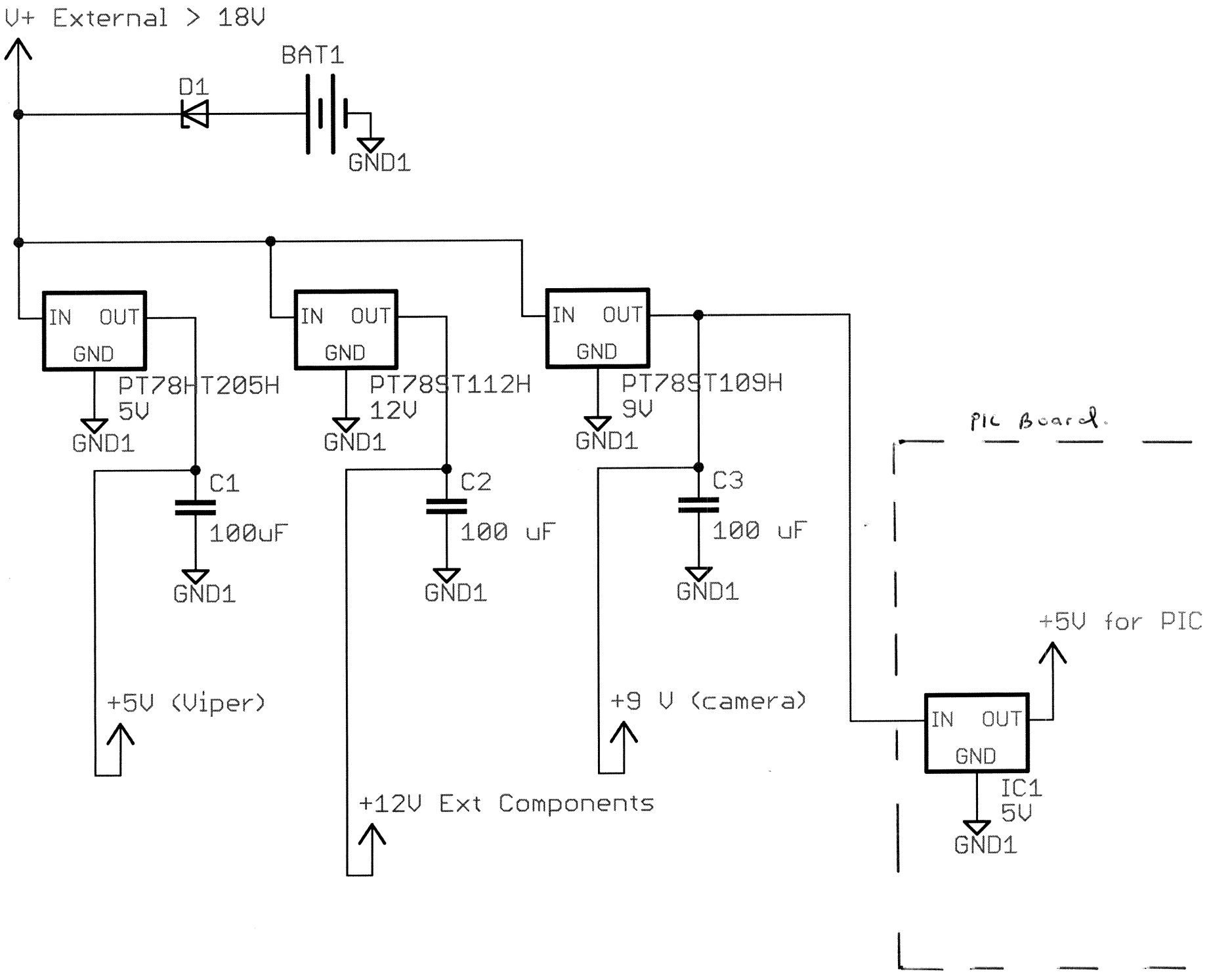
V+ External > 18V
BAT1
D1
GND1
IN OUT
GND
PT78HT205H
5V
GND1
C1
100uF
GND1
+5V (Viper)
IN OUT
GND
PT78ST112H
12V
GND1
C2
100 uF
GND1
+12V Ext Components
IN OUT
GND
PT78ST109H
9V
GND1
C3
100 uF
GND1
+9 V (camera)
PIC Board.
+5V for PIC
IN OUT
GND
IC1
5V
GND1